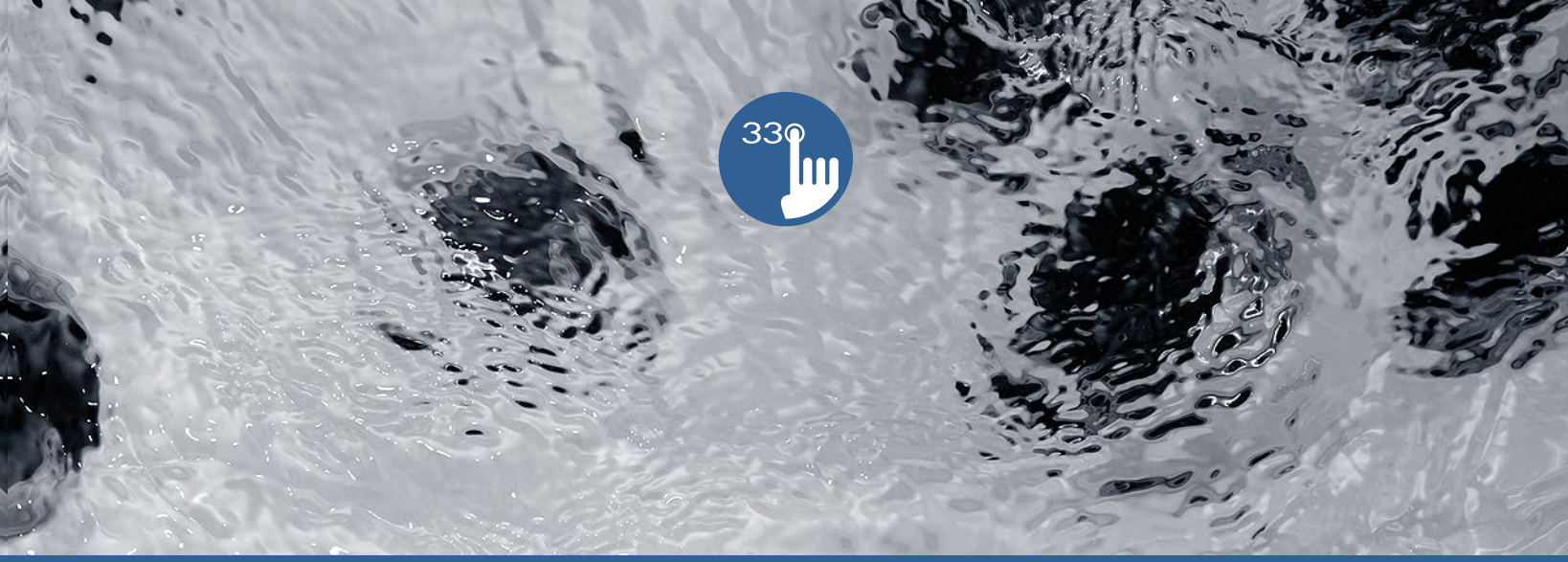


# TechBook

## in.k330

an affordable touch of luxury

Classy look

Distinctive display

Perfect 2 pump affordable solution

GECKO®

## Table of contents


Warnings ..... 2
Introduction ..... 3
in.k330 keypad layout ..... 4
in.k330 dimensions ..... 5
Installation of in.k330 ..... 5
Drilling template ..... 6
Installation notes ..... 7
Connecting in.k330 keypad to the spa control ..... 7
Keypad functions ..... 8
- Start or stop accessories ..... 8
- Water temperature ..... 8
- Off Mode ..... 8
- Keypad Lock ..... 8
- Custom key ..... 9
Programming steps ..... 10
- Program menu ..... 10
- Setting the clock ..... 10
- Programming the filter/ purge cycles ..... 10
- Setting filter or purge cycle start time ..... 11
- Setting filter cycle duration ..... 11
- Setting filter or purge cycle frequency ..... 11
- Setting economy mode* ..... 11
- Setting economy start time* ..... 12
- Setting economy duration* ..... 12
- Heat pump regulation mode ..... 12
- Setting temperature unit ..... 13
Smart Winter Mode ..... 14
Cooldown ..... 14
Water temperature regulation ..... 14
Error messages ..... 15
Specifications ..... 16

## WARNINGS:

Before installing or connecting the unit, please read the following.

**FAILURE TO COMPLY WITH THE FOLLOWING WARNINGS MAY SIGNIFICANTLY SHORTEN THE PRODUCT'S LIFE TIME, AND LEAD TO FAILURES AS WELL AS HAZARDOUS CONDITIONS*. COMMON SENSE MUST ALWAYS PREVAIL WHEN EVALUATING THE INSTALLATION AND/OR USE OF ANY ELECTRONIC CONTROL IN A FINAL APPLICATION.**

- RESPECT ENVIRONMENTAL CONDITIONS LISTED AT END OF TECHBOOK.
- THIS UNIT MUST BE INSTALLED BY QUALIFIED PERSONNEL.
- ONLY QUALIFIED PERSONNEL ARE TO SERVICE THIS UNIT. THERE ARE NO USER SERVICEABLE PARTS INSIDE.
- THIS UNIT SHOULD BE INSTALLED ON A CLEAN FLAT SURFACE.
- THE GASKET ON THE BACK OF THE UNIT WILL PREVENT WATER INFILTRATION INSIDE, BEHIND THE MOUNTED SURFACE. IF THE GASKET IS DAMAGED, SEAL THE BACK OF THE UNIT WITH SILICONE TO AVOID ANY LEAKAGE BEHIND THE MOUNTED SURFACE.
- THIS UNIT MUST BE MOUNTED ON THE OUTSIDE EDGE OF THE SPA. SEE INSTALLATION SECTION FOR DETAILS.
- THE BACK OF THIS UNIT SHOULD NOT BE ENCLOSED IN A WAY THAT CAUSES WATER TO COLLECT. SEE INSTALLATION SECTION FOR DETAILS.

* HAZARDOUS CONDITION:
A CONDITION THAT IS POTENTIALLY DAMAGING AND/OR DANGEROUS TO THE OPERATOR OR SURROUNDINGS. THIS INCLUDES, BUT IS NOT LIMITED TO: FIRE, FLOODING OR OTHER WATER DAMAGE, DIELECTRIC BREAKDOWNS (PRESENCE OF HIGH VOLTAGE), ETC.

## MAINTENANCE

If you have problems, do not attempt to repair the unit yourself. Return it to your dealer or service station for servicing

## ACCESSORY PARTS

Be sure to use only the specified accessory parts. Use of other than designated parts may damage this unit internally or may not securely install the unit in place. This may cause parts to become loose resulting in hazards or product failure.

## DISPOSAL OF THE PRODUCT

The appliance (or the product) must be disposed of separately in accordance with the local waste disposal legislation in force.

Compatible spa controls:
in.yt, in.yj, and in.ye with compatible software revision.

Aeware®, Gecko®, and their respective logos are Registered Trademarks of Gecko Alliance Group.
in.k330™, in.yt™, in.ye™, and in.yj™ and their respective logos are trademarks of Gecko Alliance Group.

All other product or company names that may be mentioned in this publication are tradenames, trademarks or registered trademarks of their respective owners.

# in.k330

## An affordable touch of luxury

With its larger dimension, sleekness and its backlit outer rim, Gecko's in.k330 is an affordable alternative for those who want to experience luxury. Its design will enhance the look of any spa.

Completely ergonomic, our new in.k330 has a big LCD screen with excellent contrasts and brightness. Its static colors and 5 keys make it so easy to use. A classy and ergonomic keypad, that's the perfect combination!

Our solidly built in.k330 supports Gecko's in.lu.me LED system and our brand new in.temp. It brings all the features you really need to one keypad. It is the perfect choice for your customers who want quality on a budget!

| Item | in.k330 |
|---|---|
| Static LCD size (as measured diagonally) | 1.5" (38 mm) |
| Integrated brackets | ● |
| Double-sided bezel gasket | ● |
| Colored icons giving instant spa status information | ● |
| Number of pumps/blowers supported | up to 3 |
| in.lu.me output support | ● |
| in.temp support | ● |

## in.k330 keypad layout

### 1 Pump Model

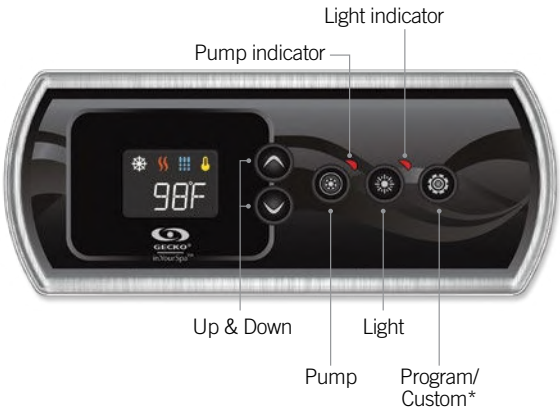


### 2 Pump Model

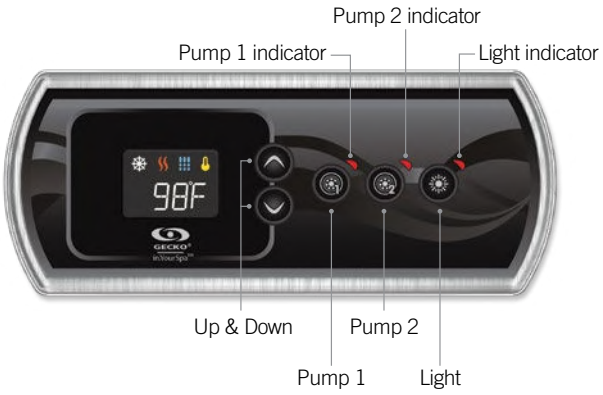


** optional function*

### Display interface

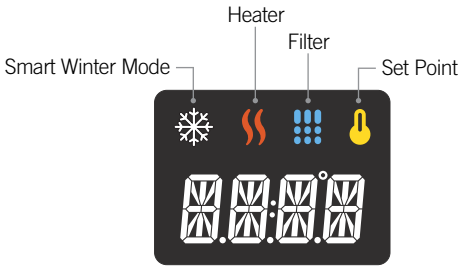

## in.k330 dimensions

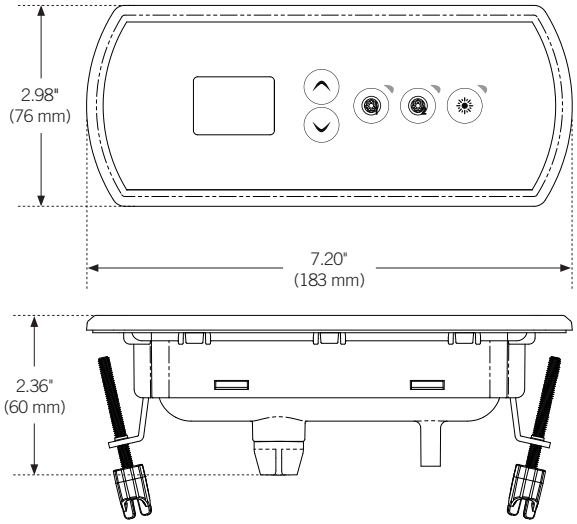


## Installation of in.k330

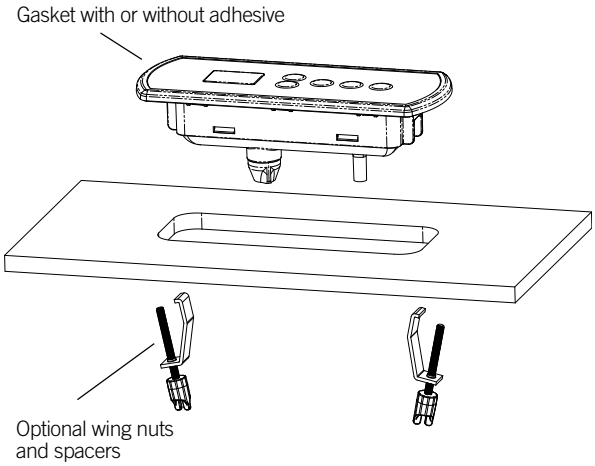


To install the in.k330, use the drilling template provided in this section.

Determine the mounting location and stick the template on chosen location.

Cut out an opening according to the template.

Clean the installation surface and peel the adhesive gasket from the back of the keypad.

Insert keypad and align it correctly, then ensure it is properly glued by gently pressing evenly on the entire surface.

## Drilling template

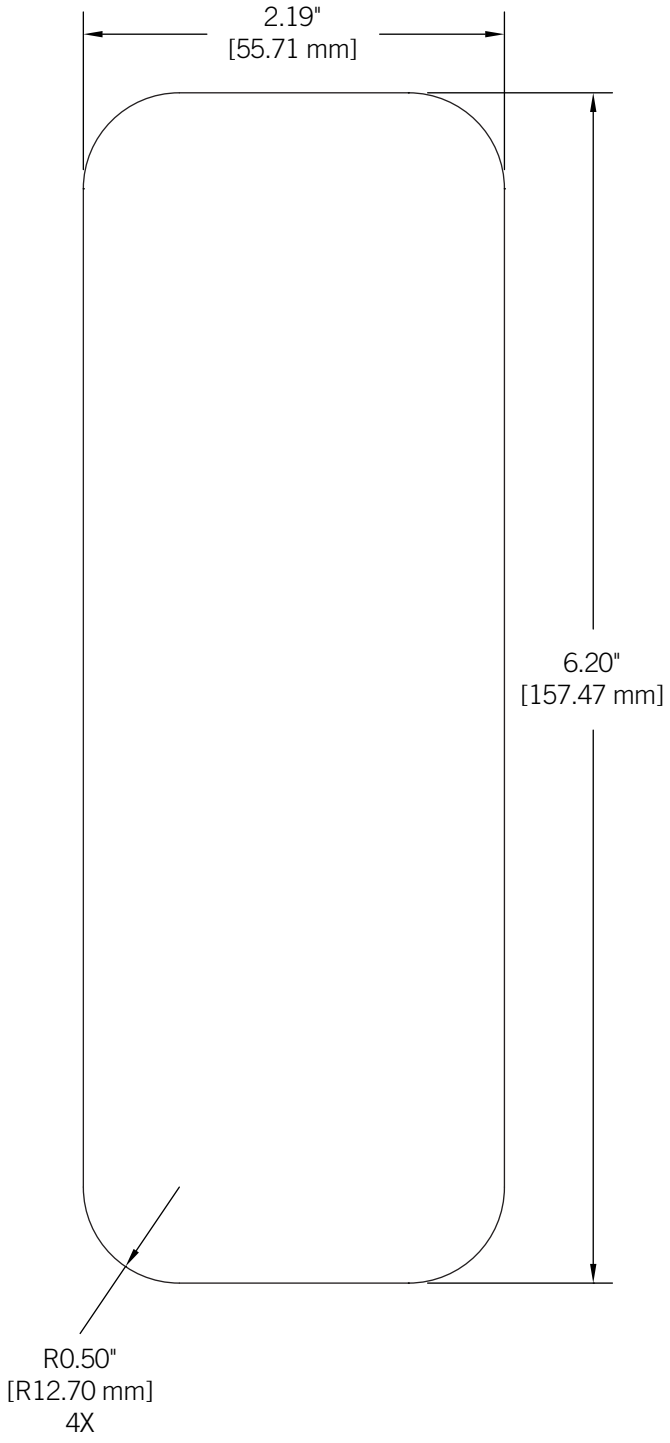

## Installation notes

### Keypad placement

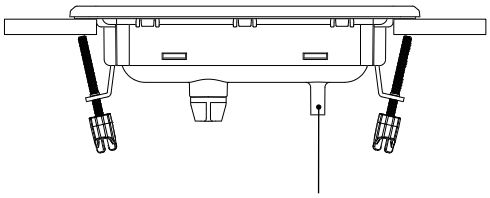

Vent hole on back of keypad should not be blocked.

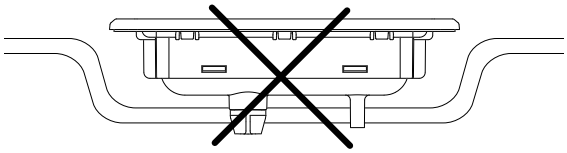

The back of the in.k330 should not be enclosed where water can gather, but instead cut out.

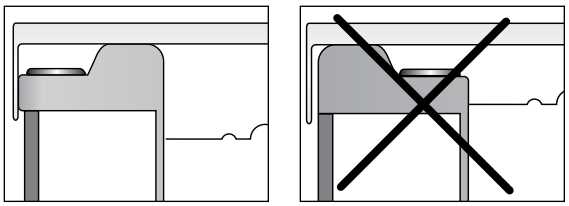

It is recommended to install the in.k330 on the outside edge of the hot tub, so that it is not subject to moisture trapped by the cover.

### Connecting in.k330 keypad to the spa control

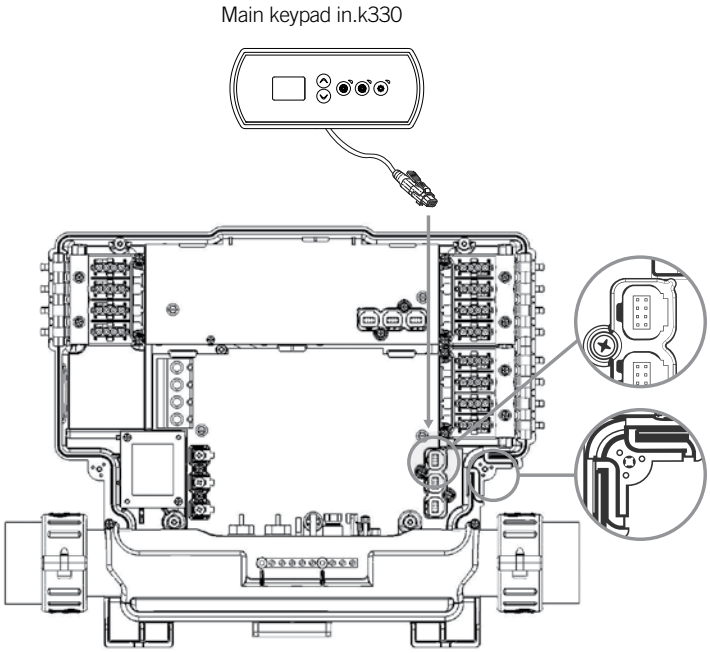


To connect the keypad, remove the cover, then insert the in.link connector into the appropriate keypad connector (as illustrated). Route the cable through one of the molded strain relief channels on the bottom right side of the spa pack (as illustrated). Fill the remaining space with the foam gaskets supplied. Don't forget to replace the cover and all screws (torque to 8 in. lb max (0.9 N.m)).

# Keypad functions

## Start or stop accessories

To start or stop an accessory, press the associated button. Indicators will light up when the associated accessory is on. When an accessory has more than two states, press the button until it reaches the desired state. Indicators will flash when dual speed pumps are on at low speed, and will be solid at high speed.

If you have a blower it will be controlled by the **Pump 2** key. The order of actions is as follows: pump 2 on; pump 2 high speed (if applicable); blower on; pump 2 off; blower off.

## Water temperature

The temperature shown on screen is the current water temperature. Use the **Up** and **Down** buttons to set the desired temperature.

The set point icon will appear at the top of the screen. After 3 seconds without any change to the set temperature value, the keypad will resume the normal display.

## Off Mode

Pressing Pump 1 for 5 seconds will enable the Off mode. This mode allows you to stop all outputs including automatic functions such as filter cycle, heat request and smart winter mode for 30 minutes to perform quick spa maintenance. When Off mode is active, the display will toggle between the “OFF” message, the clock and the water temperature. Press Pump 1 or Pump 2 (if available) to restart the system before the expiration of the 30 minute delay. When the system resumes its normal operation, the display shows “On“ for 3 seconds.

## Keypad Lock

*(Available only if the lock feature is enabled in the spa controller configuration)*

You can lock the keypad by selecting one of 2 security levels: *Partial* or *Full*. The *Partial* level locks the set point adjustment and many options in the settings menu. The *Full* level locks all keypad functions.

**Partial lock activation**
Press both arrow keys simultaneously for 5 seconds. The keypad will display "LocP". Release both keys to engage *Partial* lock.

**Full lock activation**
Press both arrow keys simultaneously for 5 seconds. The keypad will display "LocP". Keep pressing both arrow keys for 5 more seconds (10 seconds total). The keypad will display "LocF". Release both keys to engage *Full* lock.

To unlock the keypad (either *Partial* or *Full*), press and hold both arrow keys for 5 seconds; the "uLoc" message will be displayed for a few seconds as a confirmation.

## Keypad functions

### Custom key

This key is available for 1-pump systems only. It is also available only if the spa controller configuration uses a functionality related to the **Custom** key.

The following functions are available on this key:
- *Quick On Off*
- *Soak*
- *Auxiliary output*
- *Off*
- *Manual Economy*

A short press on the **Custom** key will turn on or off the selected mode in the list.

### Quick On Off

This function allows you to shut down all the active user demands (pump and light) by a key press and resume their state by another press.

Activating or deactivating *Quick On Off* mode with the **Custom** key will have no special message being displayed.

### Soak

This function allows you to soak in silence in the spa. When enabled, *Soak mode* stops all pumps activated by the user as well as the filtration and Smart Winter Mode cycles for 30 minutes.

Water temperature regulation remains active as well as circulation pump if it is configured as “Always On”. While *Soak mode* is engaged, the display toggles between the "Sby", the time and the water temperature. The display will show "On" for 3 seconds upon exit of *Soak mode*.

### Auxiliary output

It allows you to control an auxiliary output. When the control of the Auxiliary is selected by the **Custom** key, "AUX" blinks on the display. Then, the Auxiliary can be turned On or Off by another press on the **Custom** key. When the Auxiliary output is being turned on, the display shows "On" for 3 seconds. When the Auxiliary is being turned off, the display shows "OFF" for 3 seconds. Auxiliary output will be turned off automatically after 20 minutes if it is not done manually. Note that your spa controller can be configured with a different timeout.

### Off

*(Described previously in this document)*

### Manual Economy

This mode allows you to lower the temperature set point of the spa by 20 °F (11 °C). When the Economy mode is ON, the display toggles between the “Eco” message, the time, and the water temperature. The display will show "noE" for 3 seconds upon exit of *Economy mode*.

## Programming steps

### Program menu

*Instructions listed in this section assume the Program key is used, but if there is no Program key on the keypad, use the Light key instead.*

The program menu is accessible by holding down the **Program** key for 5 seconds. In the program menu the following parameters can be set: clock, filter or purge cycles, economy mode, heat pump mode and temperature units. While in the program menu, use the **Up** or **Down** key to adjust the parameters and use the **Program** key to jump to the next parameter. The changes will be saved after the confirmation of the last parameter only.

If there is no action taken for 15 seconds, the system will exit the program menu and all changes will be saved.

### Setting the clock

Enter the program menu by holding down the **Program** key for 5 seconds. The display will show the current clock setting with the hour flashing.

Depending on factory settings, your system may be set to 24-hour time or 12-hour time. An additional dot can be lit under the "**:**" separating hours and minutes to serve as an AM icon.

Setting the hour: Use the arrow keys to adjust the hour. Press the **Program** key to jump to the next parameter, the minutes.

Setting the minutes: Use the arrow keys to adjust the minutes. Press the **Program** key to jump to the next parameter, the filter or purge start time (FS).

### Programming the filter/ purge cycles

Depending on system configuration, your spa will perform either a filter or a purge cycle. The filter cycle menu consists of the following parameters: the start time (FS), the duration (Fd) and the frequency (FF). The purge cycle menu consists of the following parameters: the start time (FS) and the frequency (FF).

A filter cycle consists of starting all the pumps and blower in high speed for 1 minute (purge step) then, the pump associated with the filter will run in low speed for the remaining duration of the filter cycle (clean step).

A purge cycle is used when the spa is equipped with a 24 hour circulation pump which provides a continuous clean step. It consists of starting all the pumps and blower in high speed for 1 minute.

## Programming steps

### Setting filter or purge cycle start time

The display will show FSxx, “xx” representing the starting hour of the cycle. Use the arrow keys to adjust the hours. Use the **Program** key to jump to the next parameter, filter duration (Fd).

### Setting filter cycle duration

(not available on purge systems)

The display will show Fdxx, “xx” representing the duration in hours of the filter cycle. Use the arrow keys to adjust the duration. Use the **Program** key to jump to the next parameter, filter or purge frequency (FF).
0 = no filtration
24 = continuous filtration
It is not recommended to set this to "0".

### Setting filter or purge cycle frequency

The display will show FFxx, “xx” representing the number of cycles per day. Use the arrow keys to adjust the frequency. Use the **Program** key to jump to the next parameter, economy mode (EP).

The “Filter” indicator lights up when filter is on and flashes when suspended.

### Setting economy mode*

This mode allows you to lower the temperature set point of the spa by 20 °F (11 °C) during a certain period of the day.

The display will show EPx, “x” representing the state of the programmed economy (0 = disabled, 1 = enabled). Use the arrow keys to enable or disable economy mode. Use the **Program** key to jump to the next parameter, economy start time (ES). When the Economy mode is ON, the display will toggle between the “Eco” message, the time, and the water temperature.

** Note that the parameters for the economy mode settings are associated to specific low level configuration of the system that are not present in all software revisions.*

## Programming steps

### Setting economy start time*

The display will show ESxx, “xx” representing the hour at which the economy mode will become active. Use the arrow keys to adjust the hour. Use the **Program** key to jump to the next parameter, economy duration (Ed).

### Setting economy duration*

The display will show Edxx, “xx” representing the duration in hours of the economy mode. Use the arrow keys to adjust the hour. Use the **Program** key to jump to the next parameter, heat pump regulation mode.

24 = continuous economy

### Heat pump regulation mode

*(Available only if a Gecko Brand Heat Pump (in.temp) is connected to your spa setup)*

The Regulation Modes will help you set up your ideal Heat Pump regulation settings. Use the arrow keys to choose one of the following modes depending on your need:

- EcoH (Eco Heat)
- HEAT (Smart Heat)
- AUTO (Eco Auto)
- SMRT (Smart Auto)
- COOL (Cool)
- ELEC (Electric)

Use the **Program** key to jump to the next parameter, temperature unit.

The “Heater” indicator lights up when the system is heating the water temperature using the heat pump or the electric heater. It will flash if heating is suspended.

The “SWM” indicator lights up when the heat pump is cooling the water temperature.

** Note that the parameters for the economy mode settings are associated to specific low level configuration of the system that are not present in all software revisions.*

# Programming steps

## Heat pump modes

**EcoH (Eco Heat)**
In this mode, the heat pump is used as the unique source of heating. The heating element is kept off and the heat pump is not used to cool the water should its temperature rise above the current set point.

**HEAT (Smart Heat)**
This mode uses the heat pump as the main heating source. The heating element is turned on only if there is a large temperature difference between the water and the set point. The heat pump is not used to cool the water in this mode.

**AUTO (Eco Auto)**
This mode borrows functionality from both Eco Heat and Cool modes and has the ability to select the proper Heat or Cool mode automatically according to the water temperature. The heating element is never activated in this mode.

**SMRT (Smart Auto)**
This mode borrows functionality from both Smart Heat and Cool modes and has the ability to select the proper Heat or Cool mode automatically according to the water temperature. The heating element is activated only if there is a large temperature difference between the water and the set point.

**COOL (Cool)**
This mode uses the heat pump in cooling mode only. The heat pump is not used as a heating source and the heating element is never activated.

**ELEC (Electric)**
This mode keeps the heat pump off and uses only the heating element to regulate water temperature.

## Setting temperature unit

Water temperature can be displayed in either Fahrenheit (°F) or Celsius (°C). The display will show °F or °C.

Use the arrow keys to change the setting.
Use the **Program** key to save all the parameters.

## Others functions

### Smart Winter Mode

Our Smart Winter Mode protects your system from the cold by turning pumps on several times a day to prevent water from freezing in pipes.

The “SWM” indicator lights up when freezing is detected and flashes when the purge is active.

### Cooldown

After heating the spa water to the desired Set Point, the heater is turned off, but its associated pump (Pump 1 low-speed or CP) remains on for a predetermined period of time to ensure adequate cooling of the heating element, prolonging its useful life.

### Water temperature regulation

Every 15 to 90 minutes the pump will run to ensure accurate water temperature readings as well as avoid heater activation in dry conditions. After verifying pump activation and taking a water temperature reading if required, the system automatically turns the heater on to reach and maintain water temperature at Set Point.

Indicator flashes when taking water temperature reading.

## Error messages

The list below shows the different error messages that can appear on the home screen.
Refer to the troubleshooting and error codes section of the TechBook for your spa control for more details.

| Code | Description |
|---|---|
| HL | Warning! HL Error |
| FLO | No flow for more than 2 hours |
| FLO | No flow condition |
| OH | Warning! Spa temp. high |
| Prr | Warning! Temp. probes defective |
| AOH | Internal pack temp. high |
| UPL | The spa control does not have valid software. Please insert valid in.stick to reprogram spa control. |
| CoE | Keypad not communicating with spa control |
| Erl | Slave spa control not detected |
| HPxx (01 to 99) | Heat pump error. See in.temp techbook |

## Specifications

| Model | Part number | Description |
|---|---|---|
| 1 pump | 0607-008098 | IN.K336-CL-1OP-GE1 |
| 2 pump | 0607-008099 | IN.K336-CL-2OP-GE1 |

| Environmental | |
|---|---|
| **Operating temperature:** | -4°F (-20°C) to 149°F (65°C) |
| **Storage temperature:** | -22°F (-30°C) to 185°F (85°C) |
| **Water ingress protection:** | IPX-5 |

| Mechanical | |
|---|---|
| **Weight:** | 0.70 lb (0.3185 kg) |
| **Dimensions (W x H x D):** | 7.20" x 2.98" x 2.36" (183 mm x 76 mm x 60 mm) |

### Compatibility

in.yt, in.ye or in.yj control systems with appropriate software revision

Specifications and design are subject to change without prior notice.

9919-101654-A
Rev. 12-2019

© Groupe Gecko Alliance Inc., 2019
All trademarks or registered trademarks
are the property of their respective owners.

Gecko Alliance
450 des Canetons, Québec (Qc), G2E 5W6 Canada, 1.800.78.GECKO
www.geckoalliance.com

Printed in Canada